INVERTER AIR CONDITIONING FOR LIGHT COMMERCIAL USE

TOSHIBA

AIR CONDITIONING

What you'll find inside:

- Cassette Type
- Ducted Type
- Ceiling Type
- Hi Wall Type
- Controllers

+ Effective air filtration

+ Energy efficient

+ Digital Inverter

When technology meets comfort

Toshiba was the first company to incorporate inverter technology into air conditioning systems in 1981 and since then it has maintained a technological advantage over its competitors.

The development of the exclusive DC Hybrid Twin-Rotary Inverter Compressor system has reaffirmed this ability to innovate and maintain technological leadership in a very crowded market. But for Toshiba, innovation also means a strong commitment to international institutions that carefully evaluate the impact of new technologies on our environment.

Toshiba combines technological development with care for future generations – the result is a range of energy-efficient air conditioners, reducing greenhouse gas emissions at the source.

INVERTER

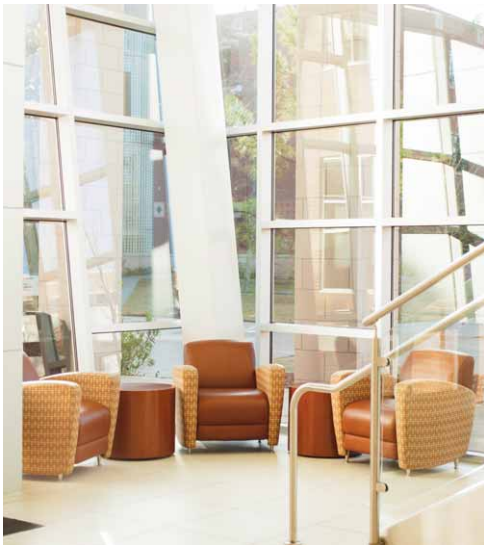

Toshiba Air Conditioning

Toshiba Air Conditioning is committed to delivering the highest standard of quality and innovation across our product range and services. For more than 40 years Toshiba Air Conditioning has led the world in creating better air conditioning and setting new standards in comfort, ease of use, energy efficiency and climate control.

The Toshiba Air Conditioning product range encompasses a comprehensive Inverter range to suit residential and light commercial applications. Toshiba Inverter systems provide excellent energy efficiency, are reliable and run on R410A non-ozone depleting refrigerant.

SDI Series 4

Enhanced Energy Efficiency (RAV-SP1104AT-A, RAV-SP1404AT-A)

Excellent efficiency, not only below rated EER conditions, but also during partial load, which is the larger part of actual operating conditions.

In addition to achieving a top ranking during 100% load (rated) conditions...

For most of the year, the air conditioner (cooler) operates while the outdoor temperature is less than 30°C.

At this time, the air conditioner load is approximately 50%, and at this level the EER is significantly greater than during rated conditions. This indicates energy efficiency in a way that cannot be expressed using just the rated energy consumption rate.

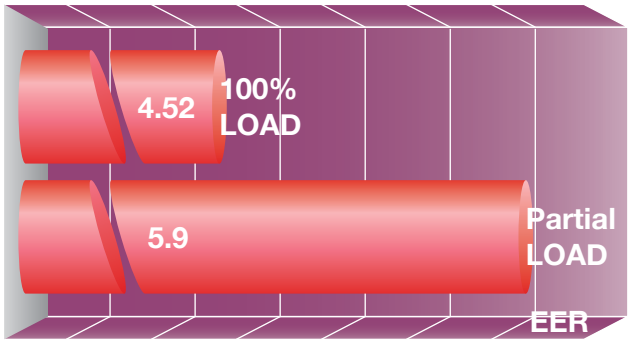

Equipped with a eco-driving DC twin rotary compressor

A low minimum speed of 10rps has been achieved. This has further improved the operating efficiency when the load is low (the minimum in Series 2 was 15rps).

The structure and shape of each compressor component has been optimised. The area of the rotor magnet has been increased and a slit introduced to the design. These improvements have further enhanced efficiency and reduced noise.

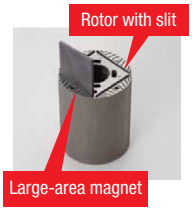

10rps Operation Verification Test

To compare operating efficiency under low load operating conditions, field tests were performed where the outdoor temperature was approximately 24°C. This is about the same as when the air conditioning is set to room temperature. Measurements were taken that demonstrated that the energy consumption of the new model was 30% less than the current model (equivalent to the areas enclosed by the energy consumption curves along the time axis).

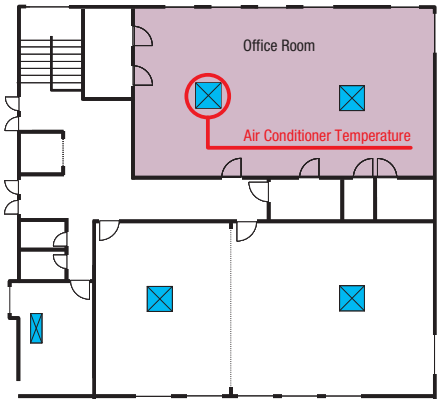

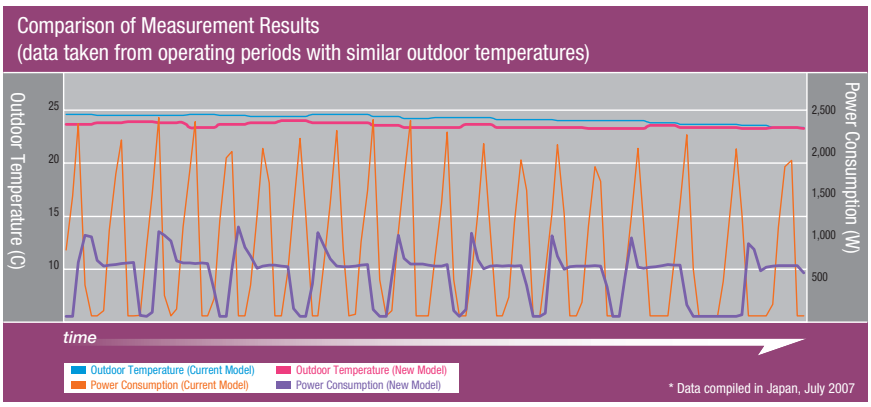

Line up

SDI Series
Single Phase

	RAV-SP564ATP-A RAV-SP564ATP-A1*	RAV-SP804ATP-A RAV-SP804ATP-A1*	RAV-SP1104AT-A RAV-SP1104AT-A1*	RAV-SP1404AT-A RAV-SP1404AT-A1*
Compact 4-way Cassette Type 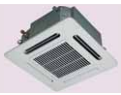	RAV-SM564MUT-E	–	–	–
4-way Cassette Type	RAV-SM564UTP-E	RAV-SM804UTP-E	RAV-SM1104UTP-E	RAV-SM1404UTP-E
Ducted Type	RAV-SM566BTP-E	RAV-SM806BTP-E	RAV-SM1106BTP-E	RAV-SM1406BTP-E
Ceiling Type	RAV-SM564CT-E RAV-SM567CTP-E	RAV-SM804CT-E RAV-SM807CTP-E	RAV-SM1104CT-E RAV-SM1107CTP-E	RAV-SM1404CT-E RAV-SM1407CTP-E
Hi-Wall Type	RAV-SM566KRT-A	RAV-SM806KRT-A	–	–

SDI Series
Three Phase

	RAV-SP1404AT8-A RAV-SP1404AT8-A1*	RAV-SP1604AT8-A RAV-SP1604AT8-A1*
4-way Cassette Type	RAV-SM1404UTP-E	RAV-SM1604UTP-E
Ducted Type	RAV-SM1406BTP-E	–
Ceiling Type	RAV-SM1407CTP-E	RAV-SM1607CTP-E

DI Series
Single Phase

	RAV-SM564ATP-A1*	RAV-SM804AT-A1*	RAV-SM1104ATP-A1*	RAV-SM1404ATP-A1*	RAV-SM1603AT-A RAV-SM1603AT-A1*
4-way Cassette Type	RAV-SM564UTP-E	RAV-SM804UTP-E	RAV-SM1104UTP-E	RAV-SM1404UTP-E	RAV-SM1604UTP-E

DI Series
Single Phase

	RAV-SM304ATP-A	RAV-SM404ATP-A	RAV-SM564ATP-A1	RAV-SM804ATP-A1
Hi-Wall Type	RAV-SM307KRTP-A	RAV-SM407KRTP-A	RAV-SM566KRT-A	RAV-SM806KRT-A

*DRC enabled CDU

Compact 4-way Cassette Type

Model
RAV-SM564MUT-E

Panel
RBC-UM11PG(W)-E

Perfect for grid system ceiling

1. This compact unit (575mm x 575mm) fits perfectly into ceilings and matches standard architectural modules, without the need to cut ceiling tiles.
2. The compact & stylish panel design is ideal for fashionable restaurants, shops and offices.
3. The louvers fold tightly against the ceiling when its operation stops.

Designed for simple & easy installation and maintenance

1. The slim design is only 268mm in height allowing it to blend into the surrounding environment neatly.
2. The ceiling type offers easy installation and maintenance, since the electrical box is located inside the unit.
3. Easy installation can also be achieved using the panel adjust pocket.
4. Long drain pump height of 850mm.
5. Available for ceilings up to 3.5m.
6. The drain-check viewing cavity makes it possible to view the drain pan.

Drain-check viewing cavity

Comfort

Inverter
Allows step-less regulation of the air-conditioner's power, which reduces energy consumption and improves comfort.

Auto-turn Louvres
Air outlet grilles move automatically to fill every corner of the room with warm or cool air.

Automatic Air Volume Control
Depending on the difference between the room temperature and the set temperature, switches automatically between High, Low and Very Low.

Long-life Filter
Built-in long-life filter makes maintenance easier.

Hot Start
When using the heater for preheating or defrosting, stops the indoor fan to prevent cold air from being blown into the room.

Automatic Cooling/Heating
Automatically switches between cooling and heating mode.

Dry
Gradually dehumidifies the room to create even greater comfort.

Operational

Filter Sign
Automatic displays on the remote controller say when to perform maintenance for the indoor unit filter.

Limit Timer
Uses a 168-hour timer with three modes —"ON timer", "OFF timer" and "Repeat OFF timer".

Installation

Cooling Capacity with an Outdoor Temperature of -15°C
Stable cooler operation is possible when the outdoor temperature is as low as -15°C.

Built-in Drain Pump
The built-in drain pump makes draining easier. (In the ceiling cassette type, it is built in to the main unit.)

Compact 4-way Cassette Type – Single Phase

INDOOR			RAV-SM564MUT-E
OUTDOOR			RAV-SP564ATP-A1
REFRIGERANT TYPE			R410A
POWER SUPPLY/PH/FREQ		Units	220-240V/1/50Hz
COOLING	Capacity - Rated	kW	4.7
	Capacity - Range (min ~ max)	kW	1.2~5.6
	Efficiency (rated)	EER	3.38
	Power Input (min ~ rated ~ max)	kW	0.21~1.39~2.29
	Operating Current (rated)	A	6.45
HEATING	Capacity - Rated	kW	5.6
	Capacity - Range (min ~ max)	kW	0.9~7.4
	Efficiency (rated)	COP	3.64
	Power Input (min ~ rated ~ max)	kW	0.17~1.54~2.37
	Operating Current (rated)	A	6.45
INDOOR UNIT	Dimension (HxWxD)	mm	268x575x575
	Net Weight	kg	16
	Airflow Volume (H/L)	L/s	221.7/151.7
	Fan Motor Output	W	60
	Sound Pressure (H/M/L) at 1m distance	dBA	43/39/34
	Sound Power (H/M/L)	dBA	58/54/49
	Cooling Usable Temperature Range	0C	21-32
	Heating Usable Temperature Range	0C	15-24
OUTDOOR UNIT	Dimension (HxWxD)	mm	550x780x290
	Net Weight	kg	44
	Compressor Type	–	DC Twin Rotary
	Fan Motor Output	W	43
	Cooling Operating Noise (Sound Pressure) (H) at 1m distance	dBA (@spl)	47
	Cooling Operating Noise (Sound Power) (H)	dBA (@swl)	63
	Heating Operating Noise (Sound Pressure) (H) at 1m distance	dBA (@spl)	48
	Heating Operating Noise (Sound Power) (H)	dBA (@swl)	64
	Cooling Usable Temperature Range	0C	-15~43
	Heating Usable Temperature Range	0C	-20~15
PIPE SIZE	Liquid Line Ø	mm	6.4
	Gas Line Ø	mm	12.7
	Coupler Style	–	Flare
	Maximum Length	m	50
	Chargeless Length	m	20
	Maximum Height Difference	m	30

4-way Cassette Type

Models

RAV-SM564UTP-E
RAV-SM804UTP-E
RAV-SM1104UTP-E
RAV-SM1404UTP-E
RAV-SM1604UTP-E

Panel

RBC-U31PGP(W)-E

Wireless remote controller kit (optional)

RBC-AX32U(W)-E

Temperature conditioning

RAV-SM564UTP-E

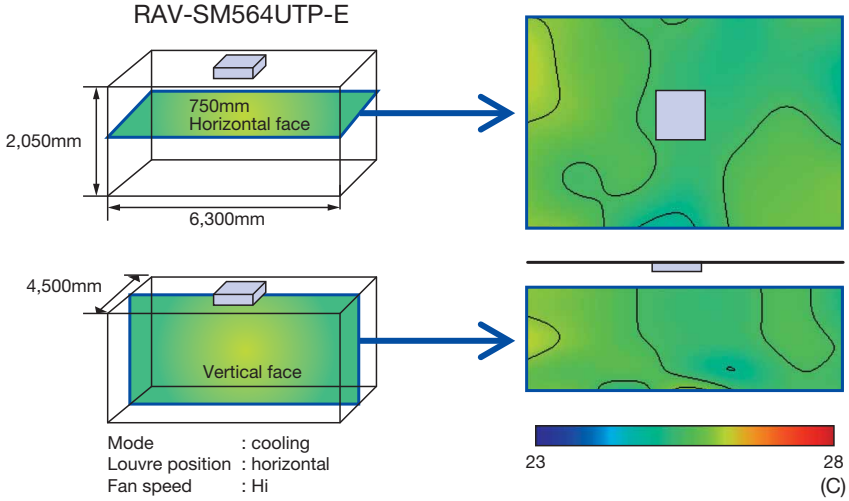

Individual Louvre Control

- The angles of each of the four louvres can be set individually
- Enables airflow to be chosen according to user preferences.

Three louvre swing patterns

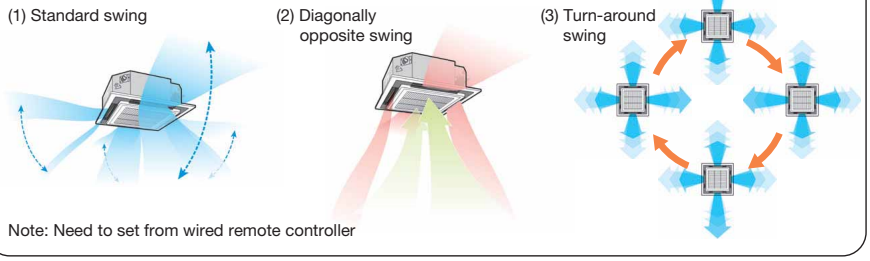

Note: Need to set from wired remote controller

Easy installation

The panel is attached using the bolt that is already installed on the indoor unit.

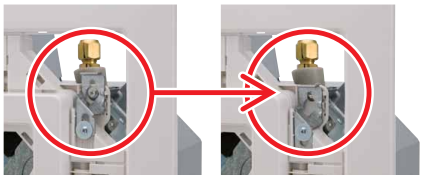

Comfort

Inverter
Allows step-less regulation of the air-conditioner's power, which reduces energy consumption and improves comfort.

Long-life Filter
Built-in long-life filter makes maintenance easier.

Individual louvre control
Enables airflows to be chosen according to user preferences.

Hot Start
When using the heater for preheating or defrosting, stops the indoor fan to prevent cold air from being blown into the room.

Auto-turn Louvres
Air outlet grilles move automatically to fill every corner of the room with warm or cool air.

Automatic Cooling/Heating
Automatically switches between cooling and heating mode.

Automatic Air Volume Control
Depending on the difference between the room temperature and the set temperature, switches automatically between High, Low and Very Low.

Dry
Gradually dehumidifies the room to create even greater comfort.

Operational

Filter Sign
Automatic displays on the remote controller say when to perform maintenance for the indoor unit filter.

Limit Timer
Uses a 168-hour timer with three modes —"ON timer", "OFF timer" and "Repeat OFF timer".

Installation

Cooling Capacity with an Outdoor Temperature of -15°C
Stable cooler operation is possible when the outdoor temperature is as low as -15°C.

Built-in Drain Pump
The built-in drain pump makes draining easier. (In the ceiling cassette type, it is built in to the main unit.)

4-way Cassette Type Super Digital Inverter – Single Phase

INDOOR			RAV-SM564UTP-E	RAV-SM804UTP-E	RAV-SM1104UTP-E	RAV-SM1404UTP-E
OUTDOOR			RAV-SP564ATP-A1	RAV-SP804ATP-A1	RAV-SP1104AT-A1	RAV-SP1404AT-A1
REFRIGERANT TYPE			R410A	R410A	R410A	R410A
POWER SUPPLY/PH/FREQ		Units	220-240V/1/50Hz	220-240V/1/50Hz	220-240V/1/50Hz	220-240V/1/50Hz
COOLING	Capacity - Rated	kW	5.3	7.1	10	12.5
	Capacity - Range (min ~ max)	kW	1.2~5.6	1.9~8.0	2.6~12.0	2.6~14.0
	Efficiency (rated)	EER	3.61	3.82	4.52	3.96
	Power Input (min ~ rated ~ max)	kW	0.20~1.47~1.95	0.30~1.86~2.52	0.64~2.21~3.60	0.64~3.16~4.40
	Operating Current (rated)	A	6.82	8.72	10.36	14.66
HEATING	Capacity - Rated	kW	5.6	8.0	11.2	14
	Capacity - Range (min ~ max)	kW	0.9~8.1	1.3~11.3	2.4~13.0	2.4~16.5
	Efficiency (rated)	COP	4.63	4.19	4.79	4.36
	Power Input (min ~ rated ~ max)	kW	0.15~1.21~2.4	0.25~1.91~3.52	0.52~2.34~4.20	0.52~3.21~4.50
	Operating Current (rated)	A	6.82	8.72	10.96	14.89
INDOOR UNIT	Dimension (HxWxD)	mm	256x840x840	256x840x840	319x840x840	319x840x840
	Net Weight	kg	20	20	24	24
	Airflow Volume (H/L)	L/s	291.7/216.7	341.7/225.0	558.4/325.1	583.5/341.7
	Fan Motor Output	W	14	20	68	72
	Sound Pressure (H/M/L) at 1m distance	dBA	32/29/28	35/31/28	43/38/33	44/38/34
	Sound Power (H/M/L)	dBA	47/44/43	50/46/43	58/53/48	59/53/49
OUTDOOR UNIT	Dimension (HxWxD)	mm	550x780x290	890x900x320	1340x900x320	1340x900x320
	Net Weight	kg	44	66	93	93
	Compressor Type	–	DC Twin Rotary	DC Twin Rotary	DC Twin Rotary	DC Twin Rotary
	Fan Motor Output	W	43	63	100+100	100+100
	Cooling Operating Noise (Sound Pressure) (H) at 1m distance	dBA (@spl)	47	48	49	51
	Cooling Operating Noise (Sound Power) (H)	dBA (@swl)	63	64	66	68
	Heating Operating Noise (Sound Pressure) (H) at 1m distance	dBA (@spl)	48	49	50	52
	Heating Operating Noise (Sound Power) (H)	dBA (@swl)	64	65	67	69
	Cooling Usable Temperature Range	0C	-15~43	-15~43	-15~43	-15~43
	Heating Usable Temperature Range	0C	-20~15	-20~15	-20~15	-20~15
PIPE SIZE	Liquid Line Ø	mm	6.4	9.5	9.5	9.5
	Gas Line Ø	mm	12.7	15.9	15.9	15.9
	Coupler Style	–	Flare	Flare	Flare	Flare
	Drain (Inside Diameter) Ø	mm	VP25	VP25	VP25	VP25
	Maximum Length	m	50	50	75	75
	Chargeless Length	m	20	30	30	30
	Maximum Height Difference	m	30	30	30	30

4-way Cassette Type Super Digital Inverter – 3 Phase

INDOOR			RAV-SM1404UTP-E	RAV-SM1604UTP-E
OUTDOOR			RAV-SP1404AT8-A1	RAV-SP1604AT8-A1
REFRIGERANT TYPE			R410A	R410A
POWER SUPPLY/PH/FREQ		Units	380-415V/3/50Hz	380-415V/3/50Hz
COOLING	Capacity - Rated	kW	12.5	14
	Capacity - Range (min ~ max)	kW	2.6-14.0	2.6-16.0
	Efficiency (rated)	EER	3.61	3.12
	Power Input (min ~ rated ~ max)	kW	0.66-3.46-4.40	0.66-4.49-5.70
	Operating Current (rated)	A	6.03	7.55
HEATING	Capacity - Rated	kW	14	16.0
	Capacity - Range (min ~ max)	kW	2.4-18.0	2.4-19.0
	Efficiency (rated)	COP	4.09	3.72
	Power Input (min ~ rated ~ max)	kW	0.53-3.42-5.50	0.53-4.30-6.51
	Operating Current (rated)	A	6.03	7.55
INDOOR UNIT	Dimension (HxWxD)	mm	319x840x840	319x840x840
	Net Weight	kg	24	24
	Airflow Volume (H)	L/s	583	592
	Fan Motor Output	W	72	72
	Heating Operating Noise (Sound Pressure) (H/L) at 1m distance	dBA (@spl)	44/34	45/36
	Heating Operating Noise (Sound Power) (H/L)	dBA (@swl)	59/49	60/51
OUTDOOR UNIT	Dimension (HxWxD)	mm	1340x900x320	1340x900x320
	Net Weight	kg	95	95
	Compressor Type	–	DC Twin Rotary	DC Twin Rotary
	Fan Motor Output	W	100+100	100+100
	Cooling Operating Noise (Sound Pressure) (H) at 1m distance	dBA (@spl)	51	51
	Cooling Operating Noise (Sound Power) (H)	dBA (@swl)	68	68
	Heating Operating Noise (Sound Pressure) (H) at 1m distance	dBA (@spl)	52	53
	Heating Operating Noise (Sound Power) (H)	dBA (@swl)	69	70
	Cooling Usable Temperature Range	DB°C	-15~46	-15~46
	Heating Usable Temperature Range	WB°C	-20~15	-20~15
PIPE SIZE	Liquid Line Ø	mm	9.5	9.5
	Gas Line Ø	mm	15.9	15.9
	Coupler Style	–	Flare	Flare
	Maximum Length	m	75	75
	Chargeless Length	m	30	30
	Maximum Height Difference	m	30	30

4-way Cassette Type Digital Inverter – Single Phase

INDOOR			RAV-SM564UTP-E	RAV-SM804UTP-E	RAV-SM1104UTP-E	RAV-SM1404UTP-E	RAV-SM1604UTP-E
OUTDOOR			RAV-SM564ATP-A1	RAV-SM804ATP-A1	RAV-SM1104ATP-A1	RAV-SM1404ATP-A1	RAV-SM1603AT-A1
REFRIGERANT TYPE			R410A	R410A	R410A	R410A	R410A
POWER SUPPLY/PH/FREQ		Units	220-240V/1/50Hz	220-240V/1/50Hz	220-240V/1/50Hz	220-240V/1/50Hz	220-240V/1/ 50Hz
COOLING	Capacity - Rated	kW	4.8	6.1	10.0	10.8	14
	Capacity - Range (min ~ max)	kW	1.5 - 5.6	1.5 - 8.0	3.0 - 11.2	3.0 - 12.5	3.0 - 16.0
	Efficiency (rated)	EER	3.29	3.26	3.31	3.00	3.12
	Power Input (min ~ rated ~ max)	kW	0.26-1.46-1.88	0.26-1.87-2.60	0.60-3.02-4.10	0.60-3.60-4.71	0.65~4.49~5.70
	Operating Current (rated)	A	7.05 - 6.60	8.75 - 8.20	14.60 - 13.50	17.20 - 15.90	21.48
HEATING	Capacity - Rated	kW	5.3	7.0	11.2	12.2	16
	Capacity - Range (min ~ max)	kW	1.5 - 6.3	1.5 - 8.5	3.0 - 13.0	3.0 - 15.0	3.0 - 18.0
	Efficiency (rated)	COP	3.90	3.74	3.82	3.73	3.61
	Power Input (min ~ rated ~ max)	kW	0.26-1.36-2.08	0.26-1.87-2.70	0.60-2.93-4.30	0.60-3.27-4.50	0.65~4.43~6.51
	Operating Current (rated)	A	6.56 - 6.15	8.75 - 8.20	14.17-13.10	16.30-15.00	21.20
INDOOR UNIT	Dimension (HxWxD)	mm	256x840x840	256x840x840	319x840x840	319x840x840	319x840x840
	Net Weight	kg	20	20	24	24	24
	Airflow Volume (H/L)	L/s	292/217	342/225	558/325	583/342	591.8/350.1
	Fan Motor Output	W	14	20	68	72	72
	Heating Operating Noise (Sound Pressure) (H/M/L) at 1m distance	dBA (@spl)	32/29/28	35/31/28	43/38/33	44/38/34	45/40/36
	Heating Operating Noise (Sound Power) (H/M/L)	dBA (@swl)	47/44/43	50/46/43	58/53/48	59/53/49	60/55/51
OUTDOOR UNIT	Dimension (HxWxD)	mm	550x780x290	550x780x290	890x900x320	890x900x320	1340x900x320
	Net Weight	kg	40	44	68	68	99
	Compressor Type	–	DC Twin Rotary	DC Twin Rotary	DC Twin Rotary	DC Twin Rotary	DC Twin Rotary
	Fan Motor Output	W	43	43	100	100	100+100
	Cooling Operating Noise (Sound Pressure) (H) at 1m distance	dBA (@spl)	46	48	53	54	51
	Cooling Operating Noise (Sound Power) (H)	dBA (@swl)	63	65	70	70	68
	Heating Operating Noise (Sound Pressure) (H) at 1m distance	dBA (@spl)	48	52	54	55	53
	Heating Operating Noise (Sound Power) (H)	dBA (@swl)	65	69	71	71	70
	Cooling Usable Temperature Range	DB	-15~46	-15~46	-15~46	-15~46	-15~43
	Heating Usable Temperature Range	WB	-15~15	-15~15	-15~15	-15~15	-15~15
PIPE SIZE	Liquid Line Ø	mm	6.4	9.5	9.5	9.5	9.5
	Gas Line Ø	mm	12.7	15.9	15.9	15.9	15.9
	Coupler Style	–	Flare	Flare	Flare	Flare	Flare
	Drain (Inside Diameter) Ø	mm	VP25	VP25	VP25	VP25	VP25
	Maximum Length	m	30*1	30*2	50*3	50*3	50*3
	Chargeless Length	m	20	20	30	30	30
	Maximum Height Difference	m	30	30	30	30	30

Notes: *1 21m to 30m need to extra charge 20g/m
*2 21m to 30m need to extra charge 40g/m
*3 31m to 50m need to extra charge 40g/m

4-way Cassette Type – Twin

INDOOR			RAV-SM804UTP-E x 2
OUTDOOR			RAV-SM1403AT-A
REFRIGERANT TYPE			R410A
POWER SUPPLY/PH/FREQ		Units	220-240V/1/50Hz
COOLING	Capacity - Rated	kW	11.2
	Capacity - Range (min ~ max)	kW	3.0~ 13.2
	Efficiency (rated)	EER	3.34
	Power Input (min ~ rated ~ max)	kW	0.65~3.35~4.50
	Operating Current (rated)	A	15.70
HEATING	Capacity - Rated	kW	14.0
	Capacity - Range (min ~ max)	kW	3.0~ 16.0
	Efficiency (rated)	COP	3.68
	Power Input (min ~ rated ~ max)	kW	0.65~ 3.80 ~4.50
	Operating Current (rated)	A	17.81 (°C220V)
INDOOR UNIT	Dimension (HxWxD)	mm	256x840x840
	Net Weight	kg	54
	Airflow Volume (H/L)	L/s	550.1/385.1
	Fan Motor Output	W	120
	Heating Operating Noise (Sound Pressure) (H/L) at 1m distance	dBA (@spl)	35/31/28
	Heating Operating Noise (Sound Power) (H/L)	dBA (@swl)	50/46/43
OUTDOOR UNIT	Dimension (HxWxD)	mm	795x900x320
	Net Weight	kg	77
	Compressor Type	–	DC Twin Rotary
	Fan Motor Output	W	100+100
	Cooling Operating Noise (Sound Pressure) (H) at 1m distance	dBA (@spl)	54
	Cooling Operating Noise (Sound Power) (H)	dBA (@swl)	71
	Heating Operating Noise (Sound Pressure) (H) at 1m distance	dBA (@spl)	54
	Heating Operating Noise (Sound Power) (H)	dBA (@swl)	71
	Cooling Usable Temperature Range	DB°C	-15~43
	Heating Usable Temperature Range	WB°C	-15~15
PIPE SIZE	Liquid Line Ø	mm	9.5
	Gas Line Ø	mm	15.9
	Coupler Style	–	Flare
	Drain (Inside Diameter) Ø	mm	VP25
	Maximum Length	m	50
	Chargeless Length	m	30
	Maximum Height Difference	m	30

Versatile and Clever Duct Type

Models

RAV-SM566BTP-E
RAV-SM806BTP-E
RAV-SM1106BTP-E
RAV-SM1406BTP-E

Wide range of applications

The use of ducts allows air outlets to be conveniently installed anywhere on the ceiling, eliminating the conspicuous presence of the air conditioner in the center of the room. Not only can this be applied to a wide variety of layouts from narrow spaces to polygonal rooms; it also greatly improves the aesthetics of a room with its unobtrusive presence.

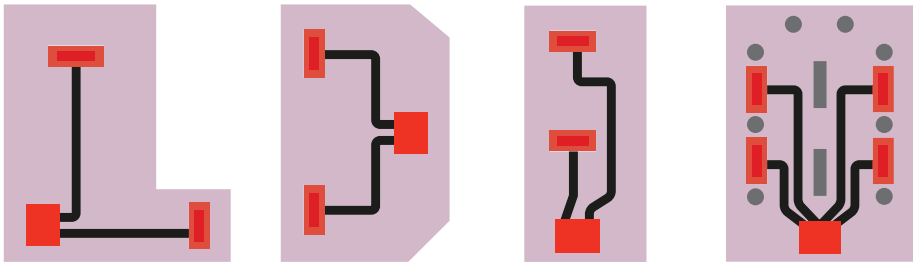

Polygonal rooms | Narrow rooms | Rooms with fixtures and obstacles

High static pressure

External static pressure can be raised as high as 120 Pa, so that all areas of the room can be reached for even temperature distribution, no matter how complex the layout.

High-lift drain pump

The flexible piping layout is made possible by an optionally available drain-pump kit that raises the drain piping up to 27cm from the drain port.

Comfort

Inverter
Allows step-less regulation of the air-conditioner's power, which reduces energy consumption and improves comfort.

Automatic Air Volume Control
Depending on the difference between the room temperature and the set temperature, switches automatically between High, Low and Very Low.

Long-life Filter
Built-in long-life filter makes maintenance easier.

Hot Start
When using the heater for preheating or defrosting, stops the indoor fan to prevent cold air from being blown into the room.

Automatic Cooling/Heating
Automatically switches between cooling and heating mode.

Dry
Gradually dehumidifies the room to create even greater comfort.

Operational

Filter Sign
Automatic displays on the remote controller say when to perform maintenance for the indoor unit filter.

Limit Timer
Uses a 168-hour timer with three modes —"ON timer", "OFF timer" and "Repeat OFF timer".

Installation

Cooling Capacity with an Outdoor Temperature of -15°C
Stable cooler operation is possible when the outdoor temperature is as low as -15°C.

Built-in Drain Pump
The built-in drain pump makes draining easier. (In the ceiling cassette type, it is built in to the main unit.)

Duct Type – Super Digital Inverter

INDOOR			RAV-SM566BTP-E	RAV-SM806BTP-E	RAV-SM1106BTP-E	RAV-SM1406BTP-E
OUTDOOR			RAV-SP564ATP-A1	RAV-SP804ATP-A1	RAV-SP1104AT-A1	RAV-SP1404AT-A1
REFRIGERANT TYPE			R410A	R410A	R410A	R410A
POWER SUPPLY/PH/FREQ		Units	220-240V/1/50Hz	220-240V/1/50Hz	220-240V/1/50Hz	220-240V/1/50Hz
COOLING	Capacity - Rated	kW	4.9	7.1	10.0	12.5
	Capacity - Range (min ~ max)	kW	1.2-5.6	1.9-8.0	2.6-12.0	2.6-14.0
	Efficiency (rated)	EER	3.25	3.45	3.79	3.26
	Power Input (min ~ rated ~ max)	kW	0.21/1.51/2.05	0.30/2.06/2.88	0.64/2.64/3.80	0.64/3.83/4.47
	Operating Current (rated)	A	7.00	9.65	12.30	17.70
HEATING	Capacity - Rated	kW	5.6	8.0	11.2	14.0
	Capacity - Range (min ~ max)	kW	0.9-7.4	1.3-10.6	2.4-13.0	2.4-16.5
	Efficiency (rated)	COP	3.61	3.62	4.04	3.81
	Power Input (min ~ rated ~ max)	kW	0.17/1.55/2.51	0.27/2.21/3.50	0.52/2.77/4.00	0.52/3.67/4.50
	Operating Current (rated)	A	7.18	10.3	12.90	17.00
INDOOR UNIT	Dimension (HxWxD)	mm	275x700x750	275x1000x750	275x1400x750	275x1400x750
	Net Weight	kg	23	30	40	40
	Airflow Volume (H/L)	L/s	222/133	333/200	583/350	583/350
	Fan Motor Output	W	150	150	250	250
	Heating Operating Noise (Sound Pressure) (H/M/L) at 1m distance	dBA (@spl)	33/29/25	34/30/26	40/36/33	40/36/33
	Heating Operating Noise (Sound Power) (H/M/L)	dBA (@swl)	55/51/46	55/51/46	63/58/54	63/58/54
OUTDOOR UNIT	Dimension (HxWxD)	mm	550x780x290	890x900x320	1340x900x320	1340x900x320
	Net Weight	kg	44	66	93	93
	Compressor Type	–	DC Twin Rotary	DC Twin Rotary	DC Twin Rotary	DC Twin Rotary
	Fan Motor Output	W	43	63	100+100	100+100
	Cooling Operating Noise (Sound Pressure) (H) at 1m distance	dBA (@spl)	47	48	49	51
	Cooling Operating Noise (Sound Power) (H)	dBA (@swl)	63	64	66	68
	Heating Operating Noise (Sound Pressure) (H) at 1m distance	dBA (@spl)	48	49	50	52
	Heating Operating Noise (Sound Power) (H)	dBA (@swl)	64	65	67	69
	Cooling Usable Temperature Range	0C	-15~43	-15~43	-15~43	-15~43
	Heating Usable Temperature Range	0C	-20~15	-20~15	-20~15	-20~15
PIPE SIZE	Liquid Line Ø	mm	6.4	9.5	9.5	9.5
	Gas Line Ø	mm	12.7	15.9	15.9	15.9
	Coupler Style	–	Flare	Flare	Flare	Flare
	Maximum Length	m	50	50	75	75
	Chargeless Length	m	20	30	30	30
	Maximum Height Difference	m	30	30	30	30

Duct Type – 3 Phase System

INDOOR			RAV-SM1406BTP-E
OUTDOOR			RAV-SP1404AT8-A1
REFRIGERANT TYPE			R410A
POWER SUPPLY/PH/FREQ		Units	380-415V/3/50Hz
COOLING	Capacity - Rated	kW	12.5
	Capacity - Range (min ~ max)	kW	2.6-14.0
	Efficiency (rated)	EER	3.24
	Power Input (min ~ rated ~ max)	kW	0.66-3.86-4.89
	Operating Current (rated)	A	6.74
HEATING	Capacity - Rated	kW	14.0
	Capacity - Range (min ~ max)	kW	2.4-18.0
	Efficiency (rated)	COP	3.81
	Power Input (min ~ rated ~ max)	kW	0.53-3.67-5.71
	Operating Current (rated)	A	6.74
INDOOR UNIT	Dimension (HxWxD)	mm	275x1400x750
	Net Weight	kg	40
	Airflow Volume (H)	L/s	583
	Fan Motor Output	W	250
	Heating Operating Noise (Sound Pressure) (H/L) at 1m distance	dBA (@spl)	40/33
	Heating Operating Noise (Sound Power) (H/L)	dBA (@swl)	63/54
OUTDOOR UNIT	Dimension (HxWxD)	mm	1340x900x320
	Net Weight	kg	95
	Compressor Type	–	DC Twin Rotary
	Fan Motor Output	W	100+100
	Cooling Operating Noise (Sound Pressure) (H) at 1m distance	dBA (@spl)	51
	Cooling Operating Noise (Sound Power) (H)	dBA (@swl)	68
	Heating Operating Noise (Sound Pressure) (H) at 1m distance	dBA (@spl)	52
	Heating Operating Noise (Sound Power) (H)	dBA (@swl)	69
	Cooling Usable Temperature Range	DB°C	-15~46
	Heating Usable Temperature Range	WB°C	-20~15
PIPE SIZE	Liquid Line Ø	mm	9.5
	Gas Line Ø	mm	15.9
	Coupler Style	–	Flare
	Maximum Length	m	75
	Chargeless Length	m	30
	Maximum Height Difference	m	30

Quiet and Comfortable Ceiling Type

Models

RAV-SM564CT-E
RAV-SM804CT-E
RAV-SM1104CT-E
RAV-SM1404CT-E

Wireless remote controller kit (optional)

RBC-AX33CE

Comfortable ambience

Very quiet operation

Greatly reduces the noise level to half that of conventional units. Operation is always whisper-quiet.

Flap control

The airflow angle is automatically set to the most suitable setting according to your cooling or heating needs, and an automatic swing mode enables airflow to reach all areas of the room to create a comfortable ambience.

In cooling mode, the flap automatically swings between the top three positions.

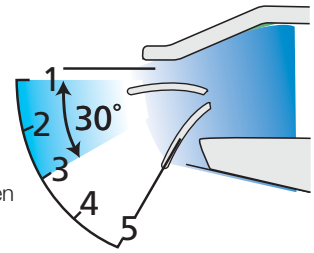

In heating mode, the flap automatically swings between all five positions.

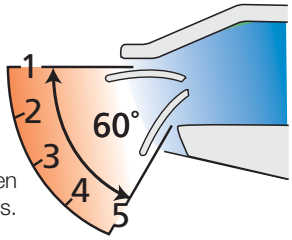

Installation efficiency

Suspending the unit from the ceiling saves the complex installation procedures. It can be suspended simply by adjusting two screws on the intake grill. Compared to units which involve a dozen screws, installation is further simplified.

Comfort

Inverter
Allows step-less regulation of the air-conditioner's power, which reduces energy consumption and improves comfort.

Hot Start
When using the heater for preheating or defrosting, stops the indoor fan to prevent cold air from being blown into the room.

Auto-turn Louvres
Air outlet grilles move automatically to fill every corner of the room with warm or cool air.

Automatic Cooling/Heating
Automatically switches between cooling and heating mode.

Automatic Air Volume Control
Depending on the difference between the room temperature and the set temperature, switches automatically between High, Low and Very Low.

Dry
Gradually dehumidifies the room to create even greater comfort.

Long-life Filter
Built-in long-life filter makes maintenance easier.

Operational

Filter Sign
Automatic displays on the remote controller say when to perform maintenance for the indoor unit filter.

Limit Timer
Uses a 168-hour timer with three modes —"ON timer", "OFF timer" and "Repeat OFF timer".

Installation

Cooling Capacity with an Outdoor Temperature of -15°C
Stable cooler operation is possible when the outdoor temperature is as low as -15°C.

Built-in Drain Pump
The built-in drain pump makes draining easier. (In the ceiling cassette type, it is built in to the main unit.)

Optional

Ceiling Type – Super Digital Inverter

INDOOR			RAV-SM567CTP-E	RAV-SM807CTP-E	RAV-SM1107CTP-E	RAV-SM1407CTP-E
OUTDOOR			RAV-SP564ATP-A1	RAV-SP804ATP-A1	RAV-SP1104AT-A1	RAV-SP1404AT-A1
REFRIGERANT TYPE			R410A	R410A	R410A	R410A
POWER SUPPLY/PH/FREQ		Units	220-240V/1/50Hz	220-240V/1/50Hz	220-240V/1/50Hz	220-240V/1/50Hz
COOLING	Capacity - Rated	kW	4.7	6.6	10.0	12.5
	Capacity - Range (min ~ max)	kW	1.2~5.6	1.9~8.0	2.6~12.0	2.6~14.0
	Efficiency (rated)	EER	3.38	3.46	3.75	3.35
	Power Input (min ~ rated ~ max)	kW	0.21~1.39~2.26	0.30~1.91~2.88	0.64~2.67~3.70	0.64~3.73~4.47
	Operating Current (rated)	A	6.45	8.95	12.51	17.3
HEATING	Capacity - Rated	kW	5.6	8.0	11.2	14.0
	Capacity - Range (min ~ max)	kW	0.9~7.4	1.3~10.6	2.4~13.0	2.4~16.5
	Efficiency (rated)	COP	3.81	3.70	4.27	3.84
	Power Input (min ~ rated ~ max)	kW	0.17~1.47~2.34	0.27~2.16~3.50	0.52~2.62~4.00	0.52~3.65~4.60
	Operating Current (rated)	A	6.45	8.95	12.28	16.93
INDOOR UNIT	Dimension (HxWxD)	mm	210x910x680	210x1180x680	210x1595x680	210x1595x680
	Net Weight	kg	21	25	33	33
	Airflow Volume (H/L)	L/s	216.7/166.7	308.4/243.4	458.4/353.4	550.1/385.1
	Fan Motor Output	W	60	60	120	120
	Heating Operating Noise (Sound Pressure) (H/L) at 1m distance	dBA (@spl)	36/33/30	38/36/33	41/38/35	43/40/37
	Heating Operating Noise (Sound Power) (H/L)	dBA (@swl)	51/48/45	53/51/48	56/53/50	58/55/52
OUTDOOR UNIT	Dimension (HxWxD)	mm	550x780x290	890x900x320	1340x900x320	1340x900x320
	Net Weight	kg	44	66	93	93
	Compressor Type	–	DC Twin Rotary	DC Twin Rotary	DC Twin Rotary	DC Twin Rotary
	Fan Motor Output	W	43	63	100+100	100+100
	Cooling Operating Noise (Sound Pressure) (H) at 1m distance	dBA (@spl)	47	48	49	51
	Cooling Operating Noise (Sound Power) (H)	dBA (@swl)	63	64	66	68
	Heating Operating Noise (Sound Pressure) (H) at 1m distance	dBA (@spl)	48	49	50	52
	Heating Operating Noise (Sound Power) (H)	dBA (@swl)	64	65	67	69
	Cooling Usable Temperature Range	0C	-15~43	-15~43	-15~43	-15~43
	Heating Usable Temperature Range	0C	-20~15	-20~15	-20~15	-20~15
PIPE SIZE	Liquid Line Ø	mm	6.4	9.5	9.5	9.5
	Gas Line Ø	mm	12.7	15.9	15.9	15.9
	Coupler Style	–	Flare	Flare	Flare	Flare
	Drain (Inside Diameter) Ø	mm	VP25	VP25	VP25	VP25
	Maximum Length	m	50	50	75	75
	Chargeless Length	m	20	30	30	30
	Maximum Height Difference	m	30	30	30	30

Ceiling Type – 3 Phase System

INDOOR			RAV-SM1407CTP-E	RAV-SM1607CTP-E
OUTDOOR			RAV-SP1404AT8-A1	RAV-SP1604AT8-A1
REFRIGERANT TYPE			R410A	R410A
POWER SUPPLY/PH/FREQ		Units	380-415V/3/50Hz	380-415V/3/50Hz
COOLING	Capacity - Rated	kW	12.5	13.9
	Capacity - Range (min ~ max)	kW	2.6-14.0	2.6-16.0
	Efficiency (rated)	EER	3.26	3.28
	Power Input (min ~ rated ~ max)	kW	0.66-3.83-4.85	0.66-4.24-6.33
	Operating Current (rated 380V-415V)	A	6.67	7.16-6.55
HEATING	Capacity - Rated	kW	14.0	16.0
	Capacity - Range (min ~ max)	kW	2.4-18.0	2.4-19.0
	Efficiency (rated)	COP	3.78	3.71
	Power Input (min ~ rated ~ max)	kW	0.53-3.70-5.95	0.53-4.31-6.96
	Operating Current (rated 380V-415V)	A	6.67	7.28-6.66
INDOOR UNIT	Dimension (HxWxD)	mm	210x1595x680	235x1586x690
	Net Weight	kg	33	35
	Airflow Volume (H)	L/s	500	567
	Fan Motor Output	W	120	139
	Heating Operating Noise (Sound Pressure) (H/L) at 1m distance	dBA (@spl)	43/37	46/36
	Heating Operating Noise (Sound Power) (H/L)	dBA (@swl)	58/52	61/51
OUTDOOR UNIT	Dimension (HxWxD)	mm	1340x900x320	1340x900x320
	Net Weight	kg	95	95
	Compressor Type	–	DC Twin Rotary	Twin Rotary
	Fan Motor Output	W	100+100	100+100
	Cooling Operating Noise (Sound Pressure) (H) at 1m distance	dBA (@spl)	51	51
	Cooling Operating Noise (Sound Power) (H)	dBA (@swl)	68	68
	Heating Operating Noise (Sound Pressure) (H) at 1m distance	dBA (@spl)	52	52
	Heating Operating Noise (Sound Power) (H)	dBA (@swl)	69	69
	Cooling Usable Temperature Range	DB°C	-15~46	-15~46
	Heating Usable Temperature Range	WB°C	-20~15	-20~15
PIPE SIZE	Liquid Line Ø	mm	9.5	9.5
	Gas Line Ø	mm	15.9	15.9
	Coupler Style	–	Flare	Flare
	Maximum Length	m	75	75
	Chargeless Length	m	30	30
	Maximum Height Difference	m	30	30

Hi-Wall Type

Model

RAV-SM307KRTP-A
RAV-SM407KRTP-A
RAV-SM566KRT-A
RAV-SM806KRT-A

Features

With its attractive, slimline design, this unit is best suited for restaurants and other applications where elegance is required. The filtration system further improves the indoor air quality benefits of this Hi-Wall unit.

Key features

With its slim design, this compact and stylish unit blends into anyroom setting.

- Enhanced filtration system: Zeolite Plus + Sasa filter to deodorise, Bio-Enzyme filter + Gingko filter to purify and a new antioxidant Vitamin C filter.
- Auto-louvre mode allows optimum air distribution throughout the room.
- A wireless controller is included.
- A TCC Link remote control is optional.

Hi-Wall Type – Twin

INDOOR			RAV-SM806KRT x 2
OUTDOOR			RAV-SP1404AT-A
REFRIGERANT TYPE			R410A
POWER SUPPLY/PH/FREQ		Units	220-240V/1/50Hz
COOLING	Capacity - Rated	kW	12.3
	Capacity - Range (min ~ max)	kW	2.6-13.5
	Efficiency (rated)	EER	3.17
	Power Input (min ~ rated ~ max)	kW	0.64~3.88~4.40
	Operating Current (rated)	A	18.0
HEATING	Capacity - Rated	kW	14.0
	Capacity - Range (min ~ max)	kW	2.4-16.5
	Efficiency (rated)	COP	3.66
INDOOR UNIT	Dimension (HxWxD)	mm	320x1050x228
	Net Weight	kg	12
	Airflow Volume (H/L)	L/s	308.4/203.4
	Fan Motor Output	W	30
	Sound Pressure (H/M/L) at 1m distance	dBA	42/39/36
	Sound Power (H/M/L)	dBA	57/54/51
OUTDOOR UNIT	Dimension (HxWxD)	mm	1340x900x320
	Net Weight	kg	93
	Compressor Type	–	DC Twin Rotary
	Fan Motor Output	W	100+100
	Cooling Operating Noise (Sound Pressure) (H) at 1m distance	dBA (@spl)	49
	Cooling Operating Noise (Sound Power) (H)	dBA (@swl)	66
	Heating Operating Noise (Sound Pressure) (H) at 1m distance	dBA (@spl)	50
	Heating Operating Noise (Sound Power) (H)	dBA (@swl)	67
	Cooling Usable Temperature Range	DB°C	-15~43
	Heating Usable Temperature Range	WB°C	-20~15
PIPE SIZE	Liquid Line Ø	mm	9.5
	Gas Line Ø	mm	15.9
	Coupler Style	–	Flare
	Drain (Inside Diameter) Ø	mm	VP16
	Maximum Length	m	50
	Chargeless Length	m	30
	Maximum Height Difference	m	30

Hi-Wall Type – Digital Inverter

INDOOR			RAV-SM307KRTP-A	RAV-SM407KRTP-A	RAV-SM566KRT-A	RAV-SM806KRT-A
OUTDOOR			RAV-SM304ATP-A	RAV-SM404ATP-A	RAV-SM564ATP-A1	RAV-SM804ATP-A1
REFRIGERANT TYPE			R410A	R410A	R410A	R410A
POWER SUPPLY/PH/FREQ		Units	220-240V/1/50Hz	220-240V/1/50Hz	220-240V/1/50Hz	220-240V/1/50Hz
COOLING	Capacity - Rated	kW	2.5	3.1	4.6	5.5
	Capacity - Range (min ~ max)	kW	0.9 - 3.0	0.9 - 4.0	1.5 - 5.6	1.5 - 7.0
	Efficiency (rated)	EER	4.1	3.97	3.26	3.24
	Star Rating	–	2.5	2.5	2.0	1.5
	Power Input (min ~ rated ~ max)	kW	0.25~0.61~0.82	0.18~0.78~2.00	0.30~1.41~1.86	0.31~1.70~2.85
	Operating Current (rated)	A	3.07-2.83	3.85-3.55	6.85-6.40	7.95-7.45
HEATING	Capacity - Rated	kW	3.0	3.2	5.3	7.0
	Capacity - Range (min ~ max)	kW	0.8-4.5	0.8-5.0	1.5-6.3	1.5-8.5
	Efficiency (rated)	COP	4.23	3.95	3.42	3.33
	Power Input (min ~ rated ~ max)	kW	19.7~58.6~85.6	10.2~40.7~85.0	0.30~1.55~2.44	0.31~2.10~3.30
	Operating Current (rated)	A	3.33	3.80	7.50-7.05	9.84-9.20
INDOOR UNIT	Dimension (HxWxD)	mm	275x790x217	275x790x217	320x1050x228	320x1050x228
	Net Weight	kg	10	10	13	13
	Cooling Airflow Volume (H/L)	L/s	143/83	143/83	233/183	283/183
	Heating Airflow Volume (H/L)	L/s	158/100	192/97	233/183	283/183
	Fan Motor Output	W	30	30	30	30
	Sound Pressure (H/M/L) at 1m distance	dBA	40/34/29	41/36/30	42/39/36	47/41/36
	Sound Power (H/M/L)	dBA	55/49/44	56/51/45	57/54/51	62/56/51
	Heating Operating Noise (Sound Pressure) (H/M/L) at 1m distance	dBA (@spl)	41/37/31	45/40/32	42/39/36	47/41/36
	Heating Operating Noise (Sound Power) (H/M/L)	dBA (@swl)	56/52/46	60/55/47	57/54/51	62/56/51
OUTDOOR UNIT	Dimension (HxWxD)	mm	550x780x290	550x780x290	550x780x290	550x780x290
	Net Weight	kg	33	39	40	44
	Compressor Type	–	Rotary DC-Invertor	Rotary DC-Invertor	DC Twin Rotary	DC Twin Rotary
	Fan Motor Output	W	43	43	43	43
	Cooling Operating Noise (Sound Pressure) (H) at 1m distance	dBA (@spl)	46	41	46	48
	Cooling Operating Noise (Sound Power) (H)	dBA (@swl)	61	64	63	65
	Heating Operating Noise (Sound Pressure) (H) at 1m distance	dBA (@spl)	47	50	48	52
	Heating Operating Noise (Sound Power) (H)	dBA (@swl)	62	65	65	69
	Cooling Usable Temperature Range	ºC	-15~46	-15~46	-15~46	-15~46
	Heating Usable Temperature Range	ºC	-15~24	-15~24	-15~15	-15~15
PIPE SIZE	Liquid Line Ø	mm	6.35	6.4	9.5	9.5
	Gas Line Ø	mm	9.52	12.7	15.9	15.9
	Coupler Style	–	Flare	Flare	Flare	Flare
	Drain (Inside Diameter) Ø	mm	10.1	10.1	16	16
	Maximum Length	m	20	20	30*1	30*2
	Chargeless Length	m	15	15	20	20
	Maximum Height Difference	m	10	10	30	30

Notes: *1 21m to 30m need to extra charge 20g/m
*2 21m to 30m need to extra charge 40g/m

Comfort

Inverter
Allows step-less regulation of the air-conditioner's power, which reduces energy consumption and improves comfort.

Hot Start
When using the heater for preheating or defrosting, stops the indoor fan to prevent cold air from being blown into the room.

Auto-turn Louvres
Air outlet grilles move automatically to fill every corner of the room with warm or cool air.

Automatic Cooling/Heating
Automatically switches between cooling and heating mode.

Automatic Air Volume Control
Depending on the difference between the room temperature and the set temperature, switches automatically between High, Low and Very Low.

Dry
Gradually dehumidifies the room to create even greater comfort.

Operational

On/Off Timer
The operation start and stop times can be set with a digital clock.

Installation

Cooling Capacity with an Outdoor Temperature of -15°C
Stable cooler operation is possible when the outdoor temperature is as low as -15°C.

Hi-Wall Type – Super Digital Inverter

INDOOR			RAV-SM566KRT-A	RAV-SM806KRT-A
OUTDOOR			RAV-SP564ATP-A1	RAV-SP804ATP-A1
REFRIGERANT TYPE			R410A	R410A
POWER SUPPLY/PH/FREQ		Units	220-240V/1/50Hz	220-240V/1/50Hz
COOLING	Capacity - Rated	kW	5.0	6.6
	Capacity - Range (min ~ max)	kW	1.2-5.6	1.9-8.0
	Efficiency (rated)	EER	3.47	3.46
	Star Rating	–	2.0	1.5
	Power Input (min ~ rated ~ max)	kW	0.21~1.44~2.05	0.30~1.91~2.88
HEATING	Operating Current (rated)	A	3.47	9.04
	Capacity - Rated	kW	5.6	8.0
	Capacity - Range (min ~ max)	kW	0.9-7.3	1.3-10.6
	Efficiency (rated)	COP	3.73	3.42
	Star Rating	–	2.5	1.5
	Power Input (min ~ rated ~ max)	kW	0.17~1.50~2.57	0.27~2.34~3.87
	Operating Current (rated)	A	6.98	9.04
INDOOR UNIT	Dimension (HxWxD)	mm	320x1050x228	320x1050x228
	Net Weight	kg	12	12
	Airflow Volume (H/L)	L/s	233/183	283/183
	Fan Motor Output	W	30	30
	Heating Operating Noise (sound pressure) (H/M/L/) at 1m distance	dBA	42/39/36	47/41/36
	Heating Operating Noise (sound power) (H/M/L)	dBA	57/54/51	62/56/51
	Cooling Usable Temperature Range	ºC	21-32	21-32
	Heating Usable Temperature Range	ºC	15-24	15-24
OUTDOOR UNIT	Dimension (HxWxD)	mm	550x780x290	890x900x320
	Net Weight	kg	44	66
	Compressor Type	–	DC Twin Rotary	DC Twin Rotary
	Fan Motor Output	W	43	63
	Cooling Operating Noise (Sound Pressure) (H) at 1m distance	dBA (@spl)	47	48
	Cooling Operating Noise (Sound Power) (H)	dBA (@swl)	63	64
	Heating Operating Noise (Sound Pressure) (H) at 1m distance	dBA (@spl)	48	49
	Heating Operating Noise (Sound Power) (H)	dBA (@swl)	64	65
	Cooling Usable Temperature Range	ºC	-15~43	-15~43
	Heating Usable Temperature Range	ºC	-20~15	-20~15
PIPE SIZE	Liquid Line Ø	mm	6.4	9.5
	Gas Line Ø	mm	12.7	15.9
	Coupler Style	–	Flare	Flare
	Drain (Inside Diameter) Ø	mm	VP16	VP16
	Maximum Length	m	50	50
	Chargeless Length	m	20	30
	Maximum Height Difference	m	30	30

Comfort

Inverter
Allows step-less regulation of the air-conditioner's power, which reduces energy consumption and improves comfort.

Hot Start
When using the heater for preheating or defrosting, stops the indoor fan to prevent cold air from being blown into the room.

Auto-turn Louvres
Air outlet grilles move automatically to fill every corner of the room with warm or cool air.

Automatic Cooling/Heating
Automatically switches between cooling and heating mode.

Automatic Air Volume Control
Depending on the difference between the room temperature and the set temperature, switches automatically between High, Low and Very Low.

Dry
Gradually dehumidifies the room to create even greater comfort.

Operational

On/Off Timer
The operation start and stop times can be set with a digital clock.

Installation

Cooling Capacity with an Outdoor Temperature of -15°C
Stable cooler operation is possible when the outdoor temperature is as low as -15°C.

Controllers

	Wired controller	Backlit wired controller	IntesisHome WiFi Controller
APPEARANCE			
MODEL NAME	RBC-AMT32E & RBC-AMS41E	RBC-AMS51E-EN	TO-RC-WIFI-1

Wireless controller kits

APPEARANCE	Integral receiver	Integral receiver	Standalone receiver
MODEL NAME	RBC-AX32U(W)-E	RBC-AX33CE	TCB-AX32E2
REMARKS	For 4-way cassette type	For under ceiling type	Suitable for all models

COMBINATIONS

COMBINATIONS		WIRED			WIFI	WIRELESS		
		RBC-AMT32E	RBC-AMS41E	RBC-AMS51E-EN	TO-RC-WIFI-1	RBC-AX32U(W)-E	RBC-AX33CE	TCB-AX32E2
Compact 4-way Cassette Series 4	RAV-SM564MUT-E	OK	OK	OK	OK			OK
4-way Cassette Series 4	RAV-SM564UTP-E	OK	OK	OK	OK	OK		OK
	RAV-SM804UTP-E	OK	OK	OK	OK	OK		OK
	RAV-SM1104UTP-E	OK	OK	OK	OK	OK		OK
	RAV-SM1404UTP-E	OK	OK	OK	OK	OK		OK
	RAV-SM1604UTP-E	OK	OK	OK	OK	OK		OK
Duct Series 6	RAV-SM566BTP-E	OK	OK	OK	OK			OK
	RAV-SM806BTP-E	OK	OK	OK	OK			OK
	RAV-SM1106BTP-E	OK	OK	OK	OK			OK
	RAV-SM1406BTP-E	OK	OK	OK	OK			OK
Ceiling Series 7	RAV-SM567CTP-E	OK	OK	OK	OK		OK	OK
	RAV-SM807CTP-E	OK	OK	OK	OK		OK	OK
	RAV-SM1107CTP-E	OK	OK	OK	OK		OK	OK
	RAV-SM1407CTP-E	OK	OK	OK	OK		OK	OK
High-wall Series 6 & 7	RAV-SM566KRT-A	OK	OK	OK	OK			OK
	RAV-SM806KRT-A	OK	OK	OK	OK			OK
	RAV-SM307KRTP-A	OK	OK	OK	OK			OK
	RAV-SM407KRTP-A	OK	OK	OK	OK			OK

SDI – Super Digital Inverter

Very efficient energy consumption

- Keeps down operating costs

Heater operation is possible starting from an outdoor temperature of –20˚C (RAV-SP1104AT-A, RAV-SP1404AT-A)

- Creates a comfortable space even during cold winters

Low-noise design. If the outdoor temperature is 30˚C or less, operates at under 45 dB

Compatible with pipes up to 75 metres long (RAV-SP1104AT-A, RAV-SP1404AT-A)

- Enables the outdoor unit to be installed out of sight increases installation flexibility

Operation in Power Save Mode enables power peaks to be cut

DI – Digital Inverter

Lightweight and compact outdoor unit

- Reduces installation space and enables a more efficient use of the site
- Keeps down delivery costs
- Easy to install on a wall

Indoor Units

4-way cassette

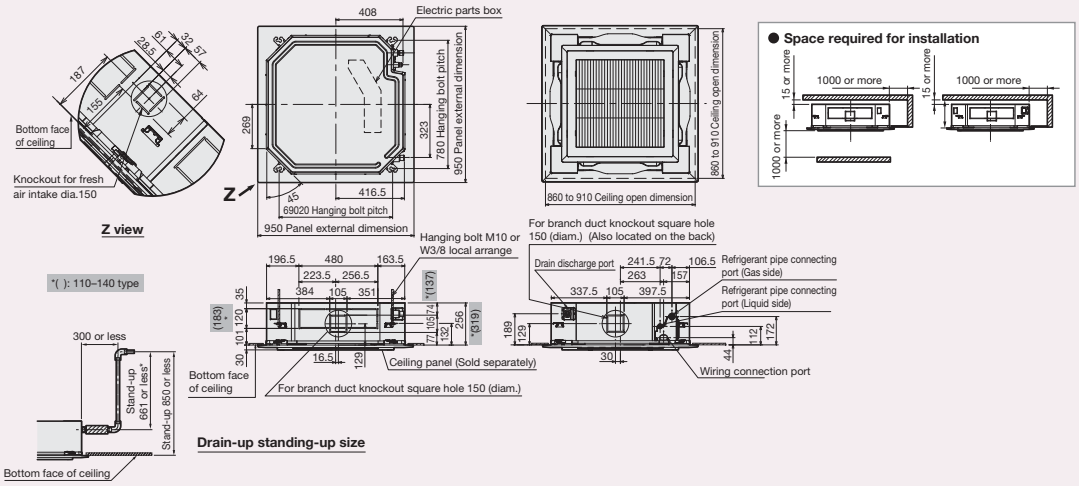

Compact 4-way cassette

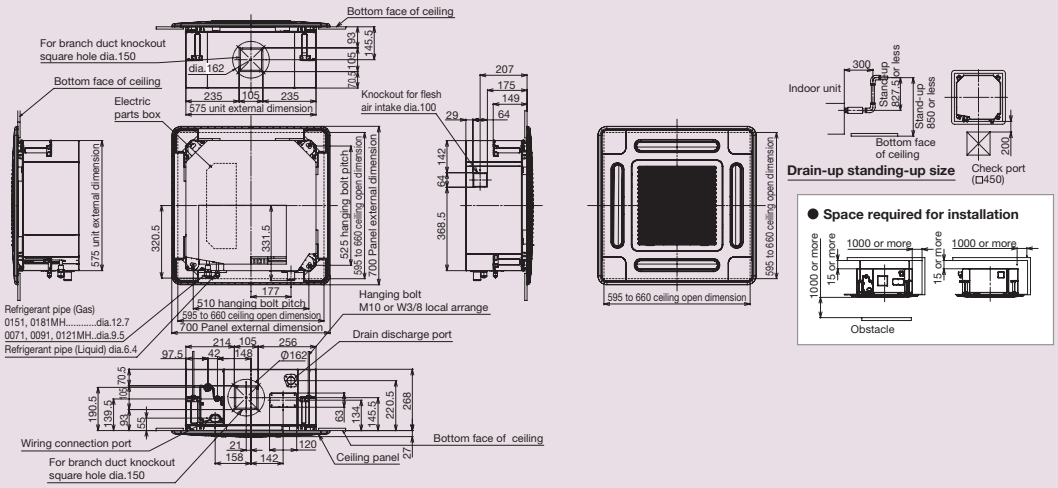

Duct

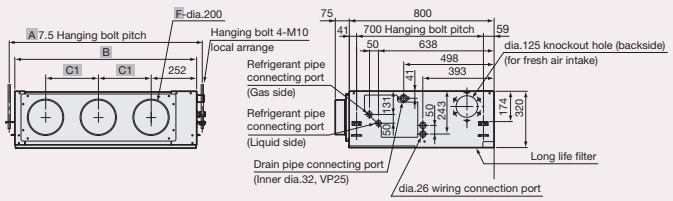

(mm)

Capacity class	A	B	C
56 type	766	700	280
80 type	1066	1000	290
110–140 type	1416	1350	310

Ceiling

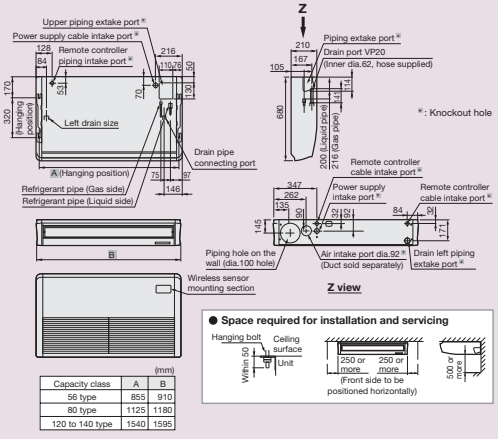

(mm)

Capacity class	A	B
56 type	855	910
80 type	1125	1180
120 to 140 type	1540	1595

Hi Wall

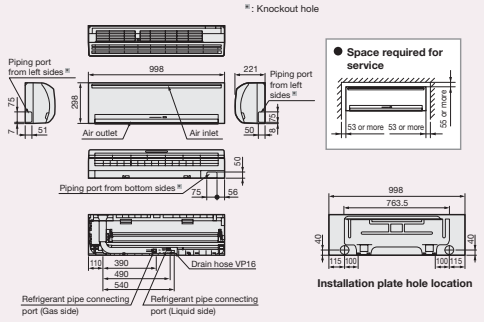

Units: mm

Outdoor Units

RAV-SM564AT-A1 ~ RAV-SM804AT-A1

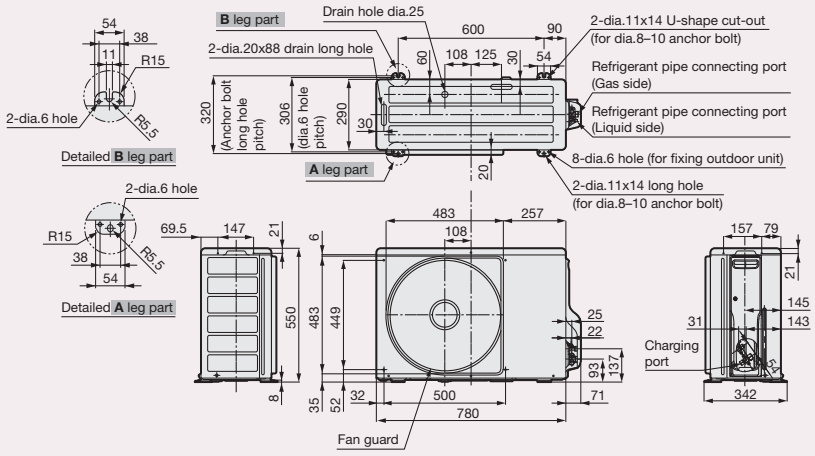

RAV-SP564ATP-A1 ~ RAV-SP804ATP-A1, RAV-SM1104ATP-A1 ~ RAV-SM1404ATP-A1

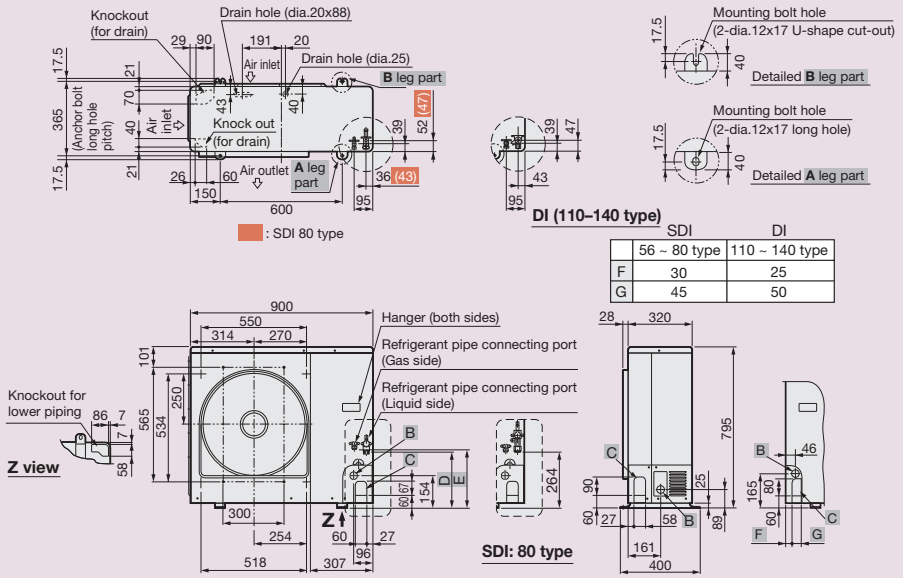

	SDI	DI
	56 ~ 80 type	110 ~ 140 type
F	30	25
G	45	50

● **Space required for service**

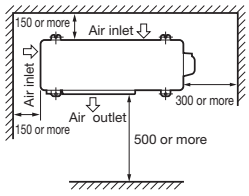

RAV-SP1104AT-A1 ~ RAV-SP1404AT-A1

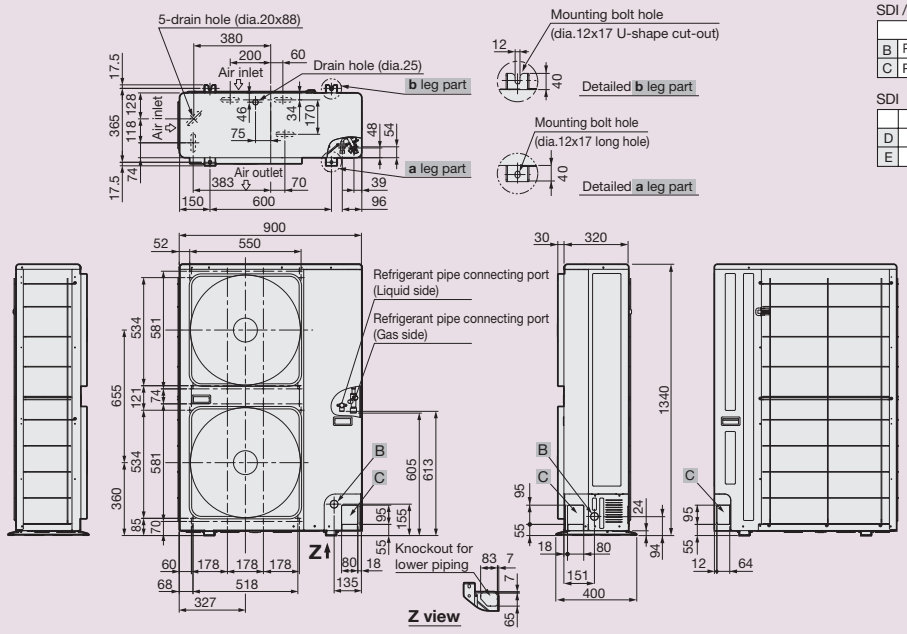

SDI / DI

	Name	56–140 type
B	Power supply wiring hole	dia.38 knockout hole
C	Piping drawing port	

SDI

	56 type	80 type
D	269	264
E	282	

Units: mm

AHI Carrier is committed to continuously improving its product to ensure the highest quality and reliability standards, and to meet local regulations and market requirements. All features and specifications are subject to change without prior notice.

All images provided in this catalogue are used for illustration purposes only.

Equipment rates in accordance with MEPS 3823.2-2011 E&OE

Cooling and heating capacities mentioned for the products are nominal capacities at standard operation conditions

Part number: 1013-082015
Date: August 2015

Sales and Service 13 COOL (13 2665)
Tenancy 3-4, 15 Corporate Drive,
Heatherton VIC 3202
ABN 47136426214
AU22499
toshiba-aircon.com.au

ISO 9001 BUREAU VERITAS Certification

MEPS COMPLIANT MINIMUM ENERGY PERFORMANCE STANDARDS

TOSHIBA
AIR CONDITIONING